BF115D Component Identification

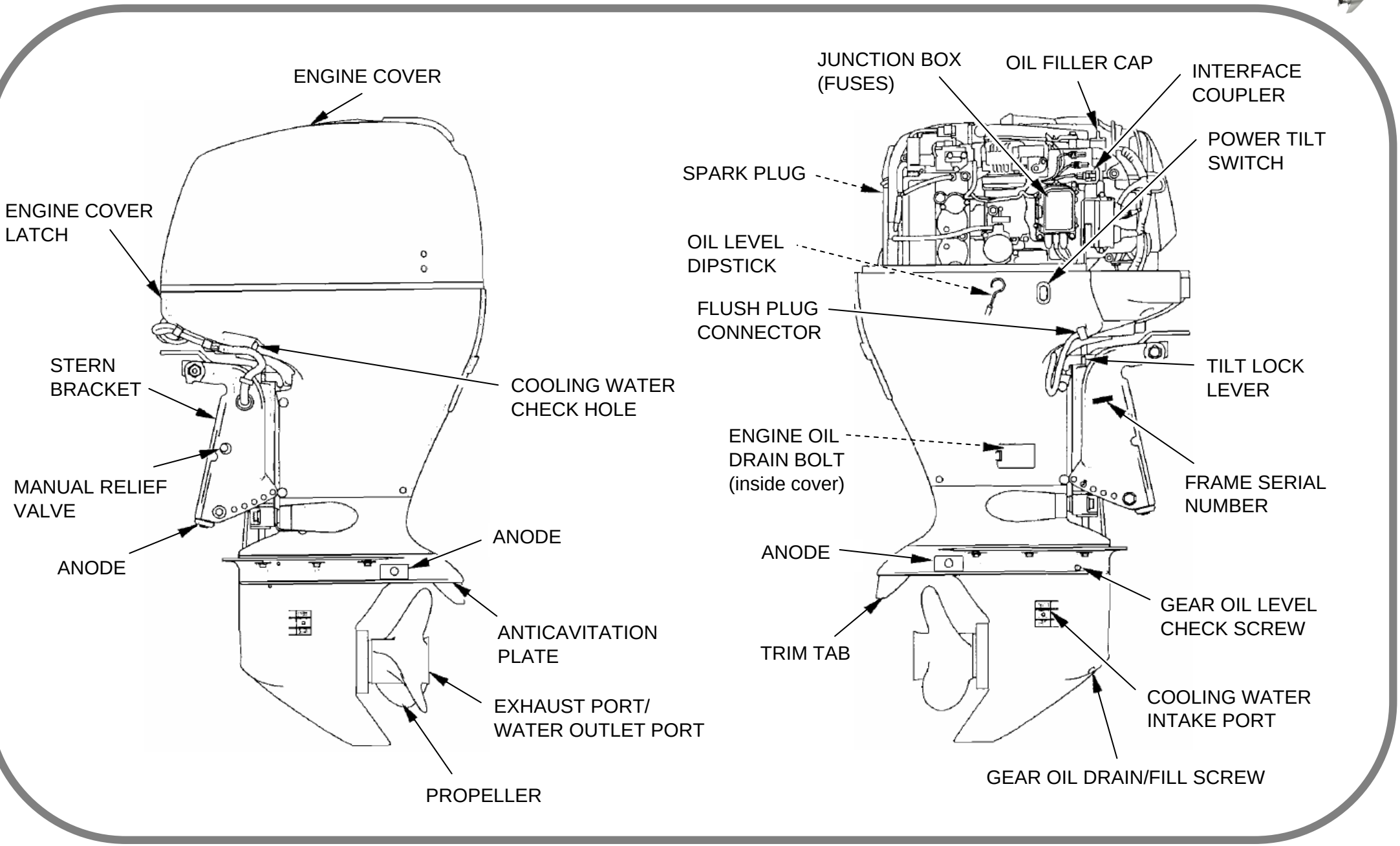

See the owner's manual for additional information.

© Honda Motor Co., Ltd. 2010