BF2D・BF2.3D Component Identification

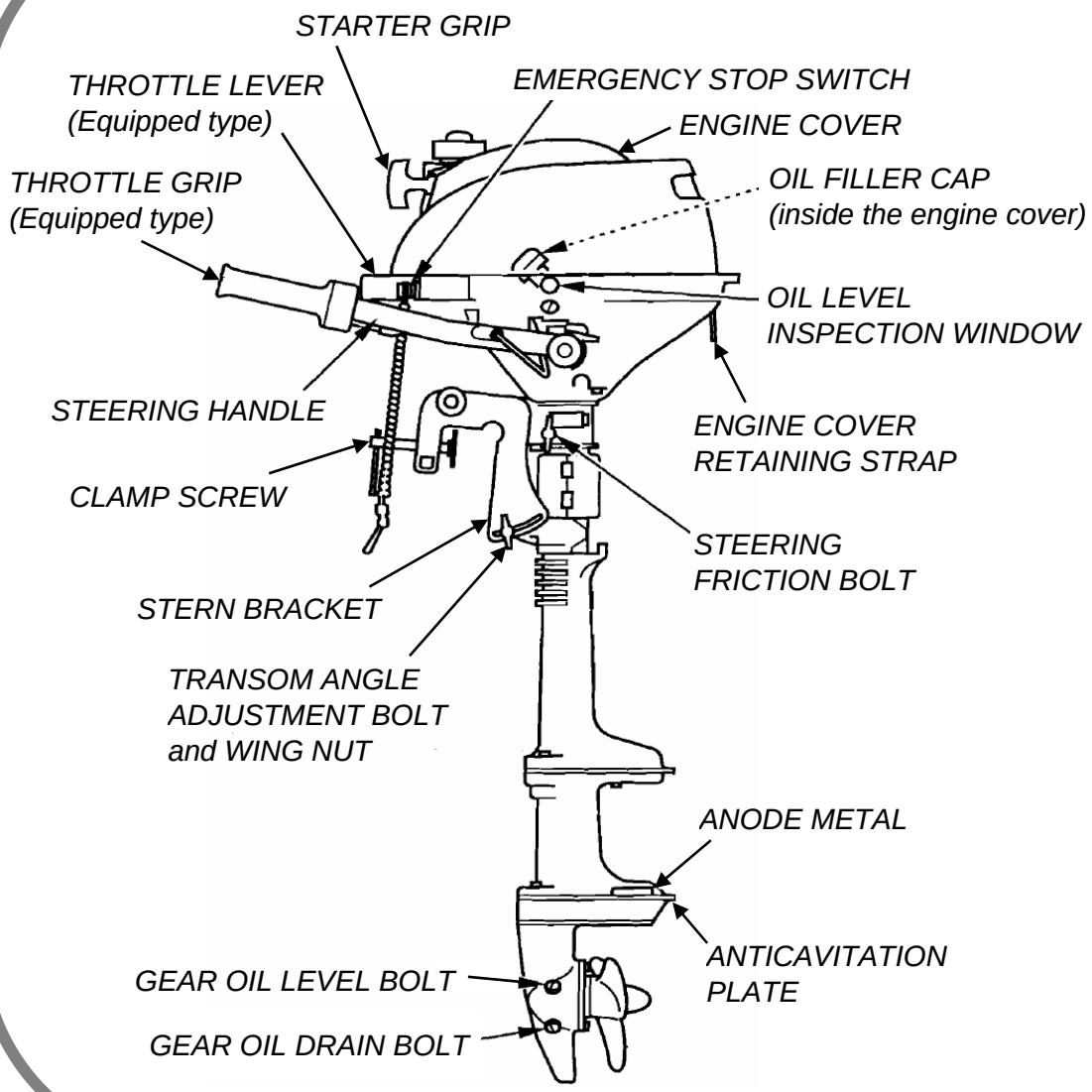

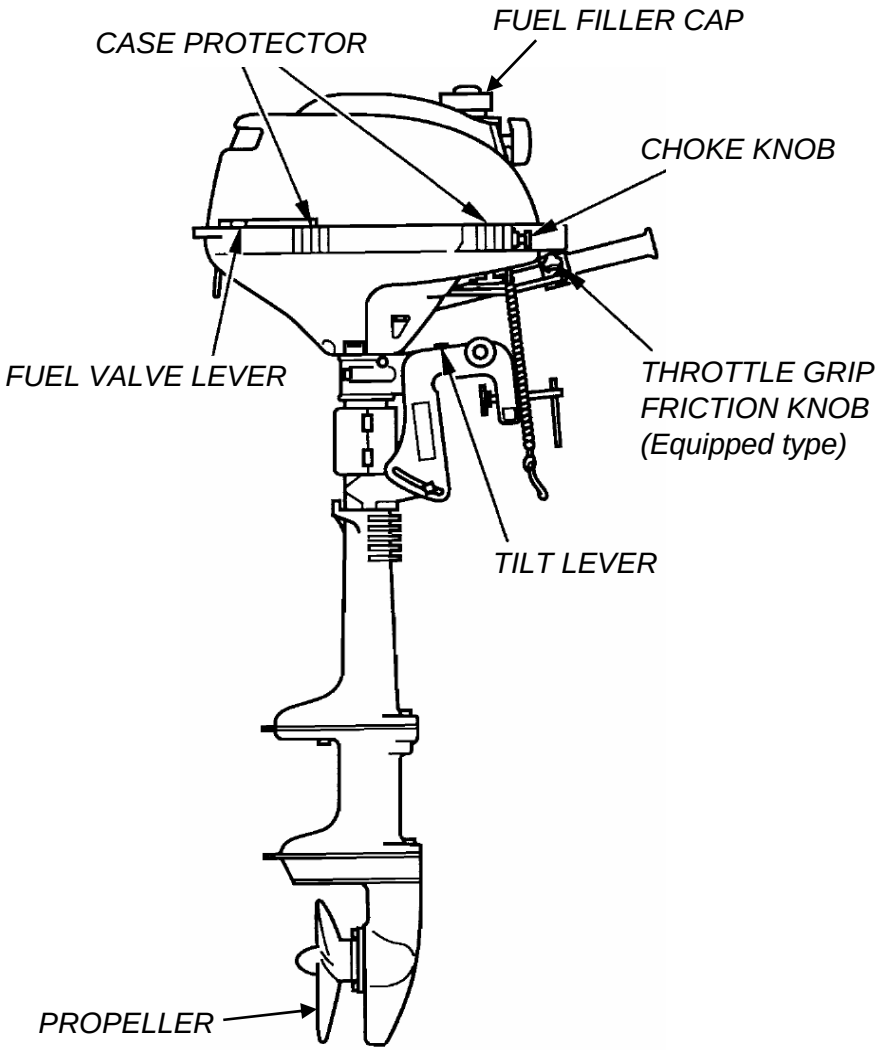

See the owner's manual for additional information.

© Honda Motor Co., Ltd. 2010