BF8D・BF10D・BF15D・BF20D Component Identification

TILLER HANDLE TYPE (H type)

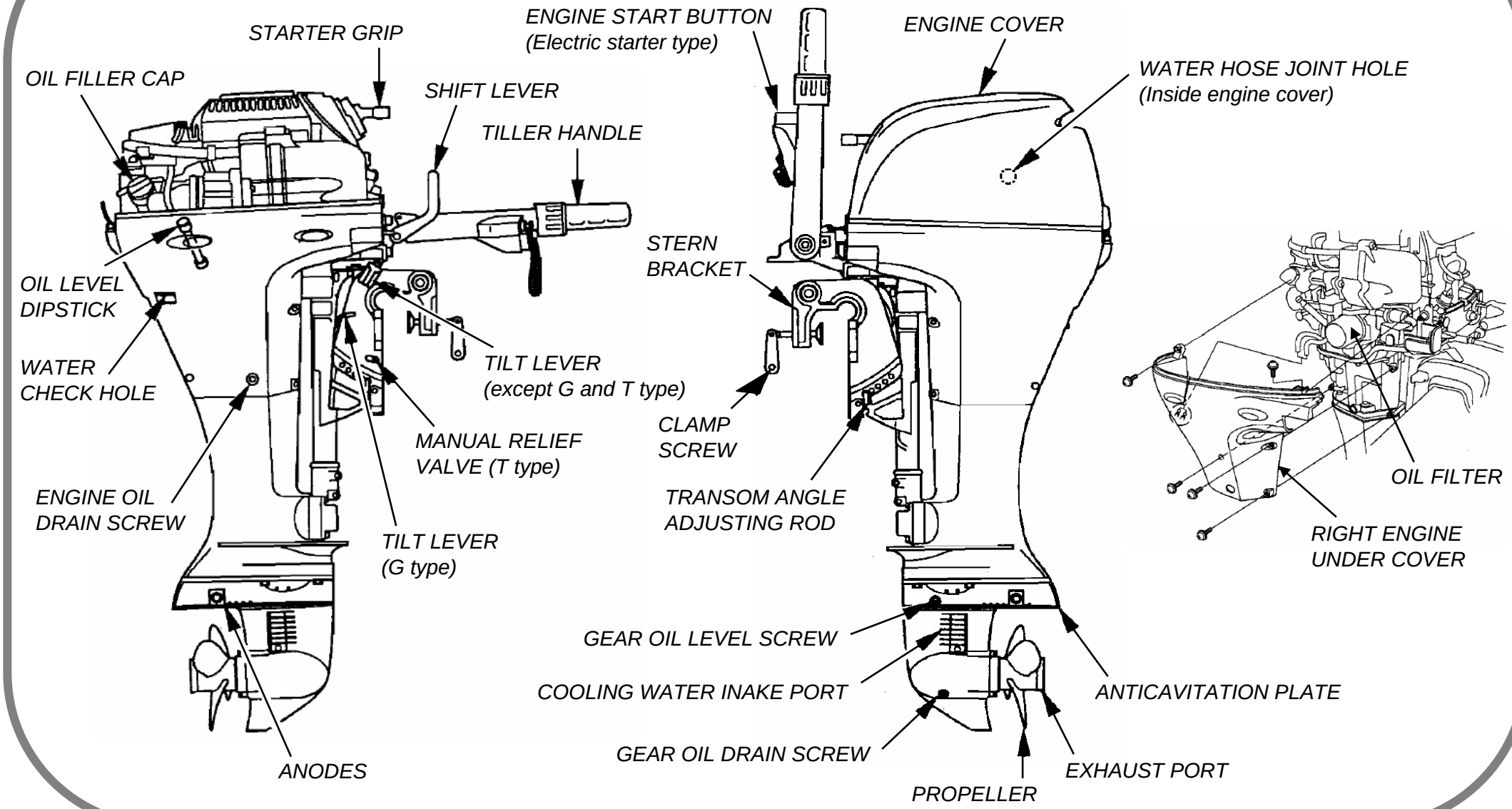

See the owner's manual for additional information.

© Honda Motor Co., Ltd. 2010