BF25D・BF30D Component Identification

REMOTE CONTROL TYPE (R type)

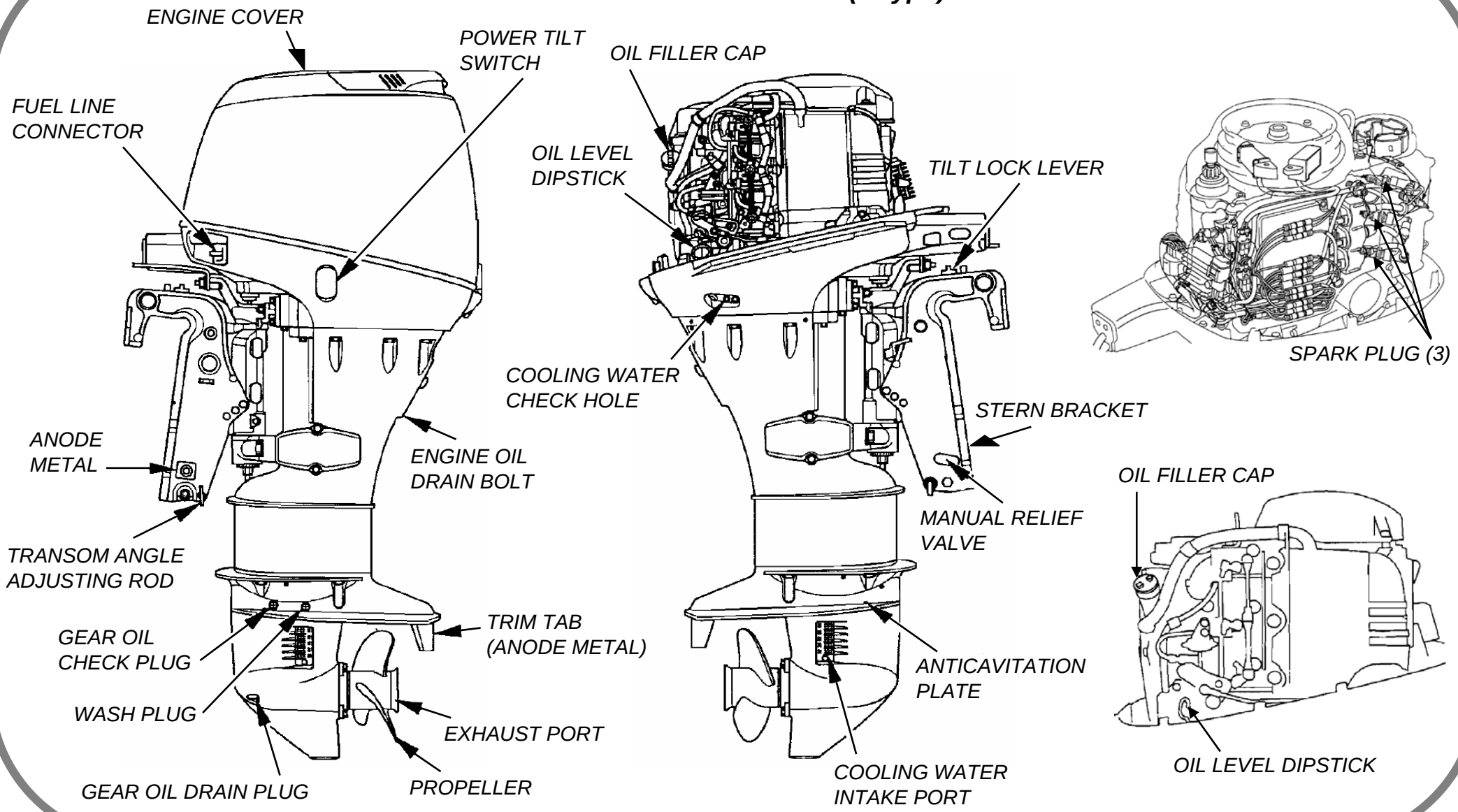

See the owner's manual for additional information.

© Honda Motor Co., Ltd. 2010