BF75D・BF80A・BF90D・BF100A Component Identification

【R (Remote Control) type】

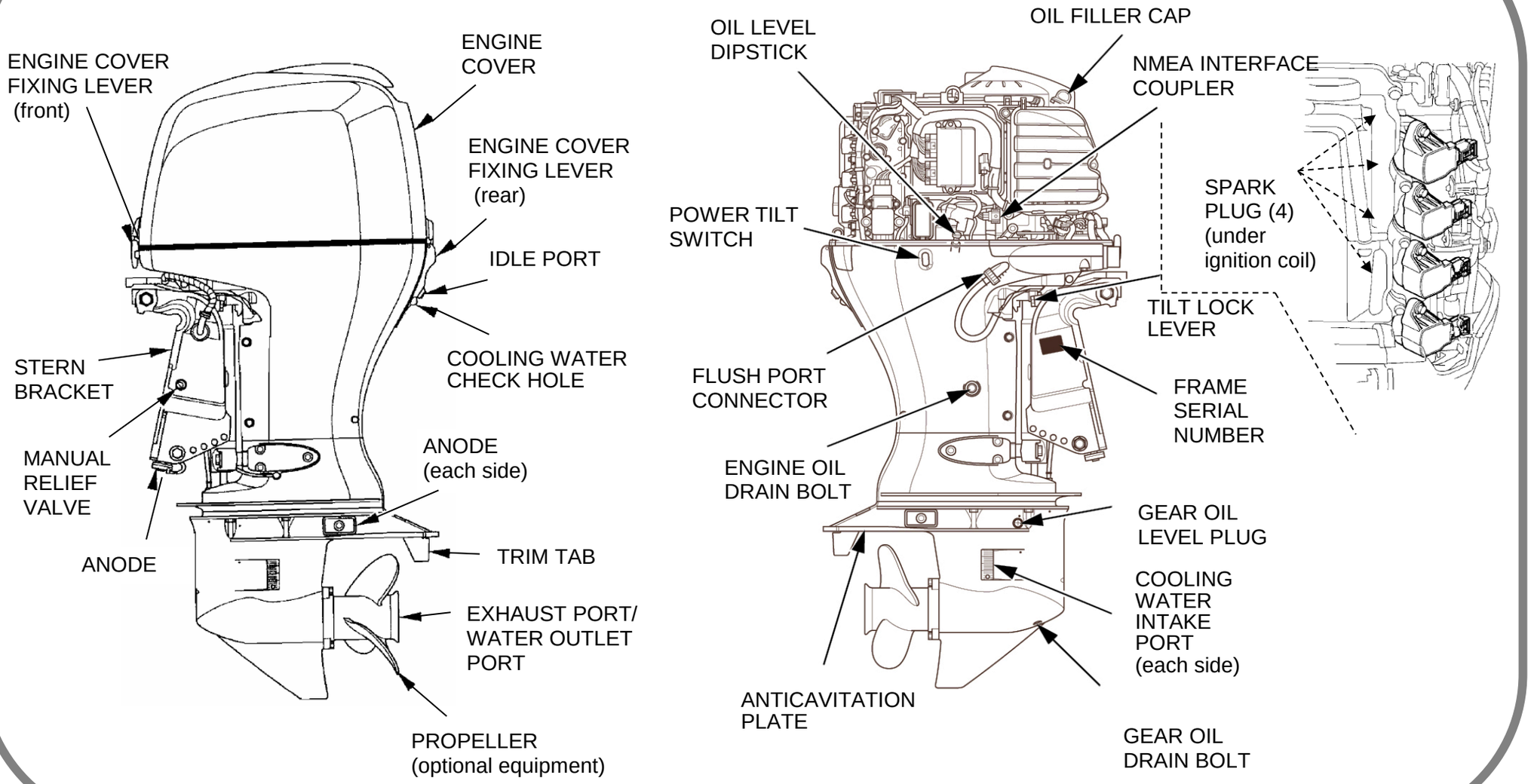

See the owner's manual for additional information.

© Honda Motor Co., Ltd. 2014