BF4AH - BF5AK2 - BF6AH Component Identification

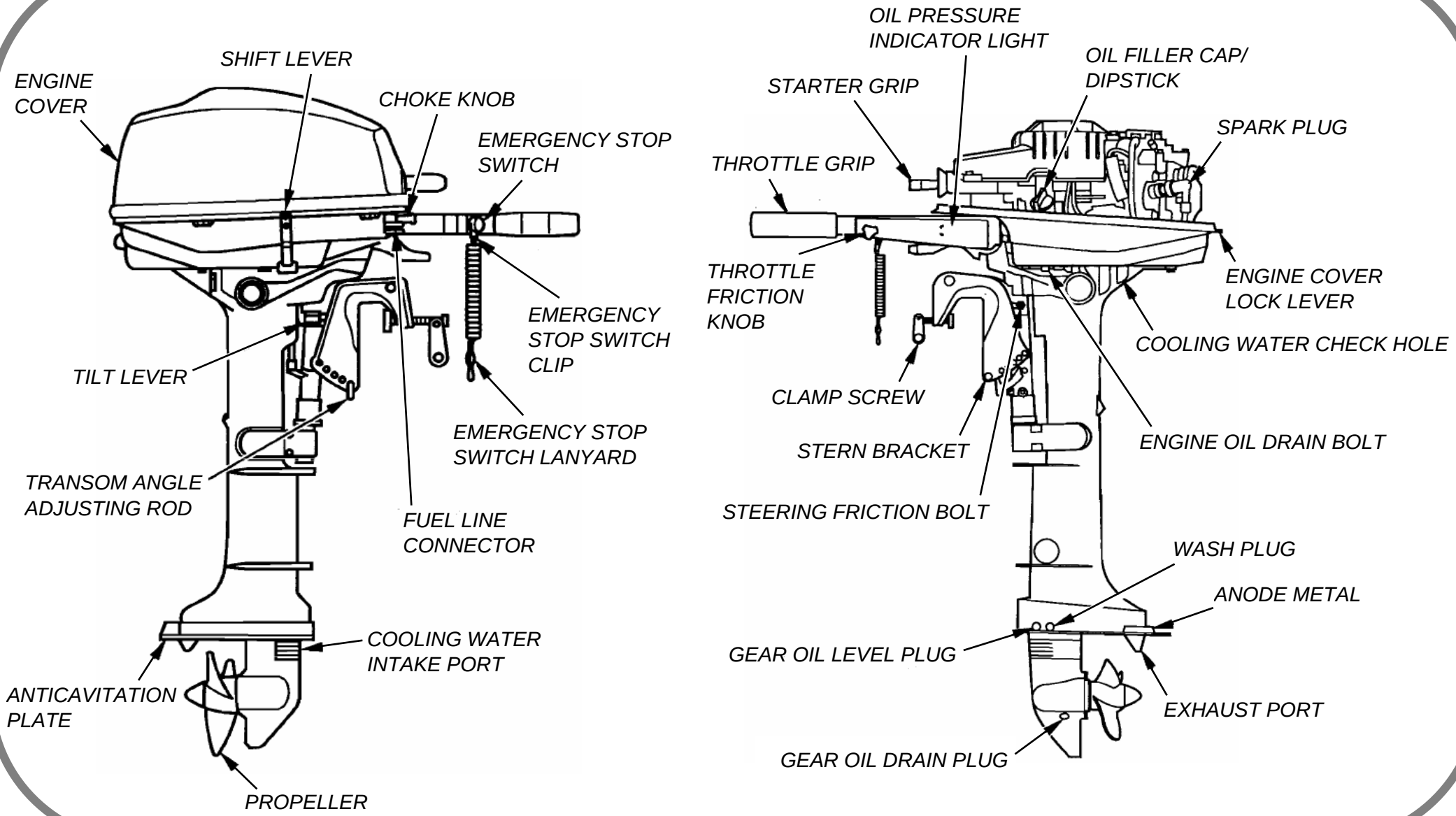

See the owner's manual for additional information.

© Honda Motor Co., Ltd. 2017